OPERATING INSTRUCTIONS + LOGBOOK

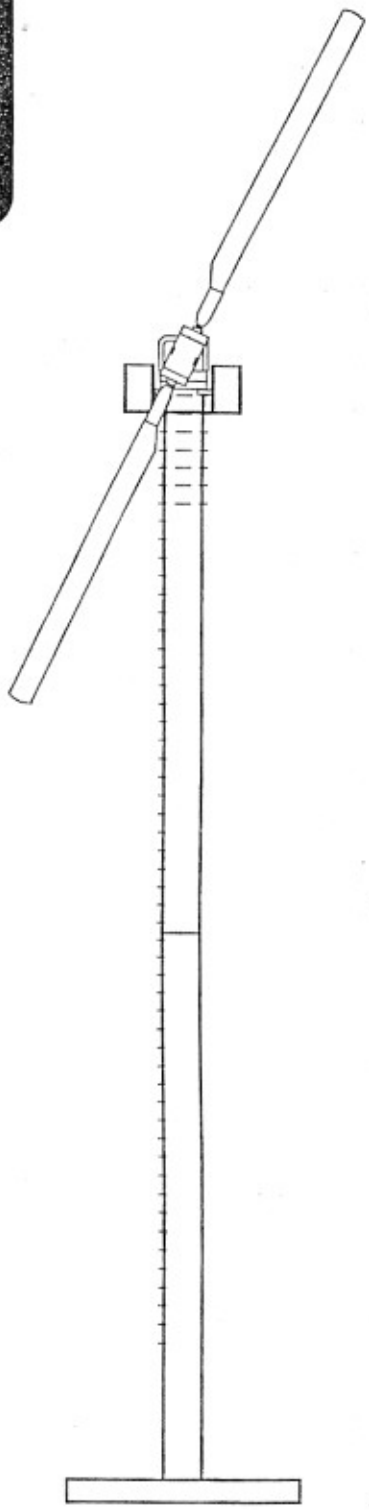

FOR THE WINDTURBINE

LAGERWEY WINDTURBINE BV

Postbus 279
3770 AG Barneveld
Tel.: 0342-422724 / Fax : 0342-422861

Table of contents

OPERATING INSTRUCTIONS WIND MILL

Operated with PLC

We suppose that the windmill rotor is not locked.

Starting the Windmill:

1. Turn Main Switch (Q1) to 1

2. The PLC display should now read out the wind speed in m/s, the rotor rpm, the kW and the kW hours and read CONNECTED 10 min wind <>. Please note that display could take a few seconds to appear.

3. The PLC will turn the windmill out of the wind and begin measuring ten minute average windspeed.

Yawing:

Yawing is the turning of the generator assembly. Normally the windmill will control the Yaw automatically. After a STOP command or an ALARM the windmill will yaw 110 degrees out of the wind. Manual Yawing is done by pressing the <-,-> keys on the PLC display panel.
If all else fails, use the blue manual buttons below the control panel to directly close the Yaw contactors.

Stopping the turbine:

Push the STOP button on the PLC control panel and the generator assembly will yaw out of the wind and stop.

CAUTION

Check to be sure that there are no error messages on the display after the main switch has been opened and closed again. If unusual displays are observed remedy immediately.

Error messages:

Error messages are accompanied by the number indicating the type of error and what the wind mill control is doing about it. See the Alarm discription,in this manual you may receive further instructions on what you can do to return the mill to normal operating condition.

Cable twist control:

After the cable has been twisted approximately three turns, the mill will untwist the cable if the windspeed is less than 10m/sec. If the wind speed is greater than 10 m/sec. and less than 20m/sec the mill will only untwist the cable for 1 turn. If the wind speed is greater then 20 m/sec the mill will wait with untwist until the windspeed is less than 20 m/sec.

Display information:

A. By pressing F4 and 0 together and then pressing 0 alone, following displays are possible. To return to normal display press RESET.

-previous hour windspeed and kWh
-previous day windspeed and kWh
-previous week windspeed and kWh
-previous month windspeed and kWh
-peak 5 minute gust
-total operating hours of the mill
-Windvane , M.W.O. powermeasuring , version number

B. To display windspeed and kWh and the date ,press F4 and 1 together and then pressing 1 alone, following displays are possible. Pressing the Reset key will return you to normal display.

-windspeed and kWh of the previous two months by day.

C. To display windspeed and kWh of the previous two years by month press F4 and 2 together and then pressing 2 alone, following displays are possible. Pressing the Reset key will return you to normal display.

-windspeed and kWh of the previous two years by month, liver hours availability.

D. To display the last 200 alarms and reset times press F4 and 3 together and then pressing 3 alone,following displays are possible. Pressing the Reset key will return you to normal display.

-Date , time and alarmnumber.

Meaning of the alarm numbers:

0 - reset alarm
100 - alarm grid failure
101 - alarm inverter failure
102 - alarm Q2 is off
103 - alarm K2 failure
104 - alarm power failure
105 - alarm overspeed
106 - alarm RPM sign. failure
107 - alarm inverter temp.
108 - alarm imbalance
109 - alarm wind
110 - alarm low battery
111 - alarm WS sign. failure
112 - alarm K1 failure
113 - alarm cable tw. failure
114 - alarm windvane failure
115 - alarm yaw motor failure
116 - alarm rotor brake failure
117 - alarm K1 , fuses failure
118 - alarm max power

SAFETY PRECAUTION BEFORE MAINTENANCE:

1. Be sure that you are familiar with the operation of this mill before attemping any maintenance procedures. Check with your dealer if in doubt.

2. To stop windmill press STOP. Wait until mill yaws out of wind by itself . Then turn off the main switch to position 0

3. To lock the rotor, engage the lock pin into the generator coupling. This procedure is to be done only if rotor is completely stopped or damage will result.

Record all maintenance procedures and events in turbine log book.

Recordings in the logbook are:

- Adjusted setpoints.
- Alarms and incidents.
- Maintenance en inspection-times.
- Established deviations by inspection.
- Installed alterations.
- Names of persons of dealers who carry out the maintenance procedures on the wind mill.

SPECIAL FUNCTIONS :

Press F4 and 0 simultaneously for first text and then only 0 for next text.
= kWhs and windspeed in previous hour,day,week,month,
the max. power in 5 min. and the totaled delevery hours from the turbine.

Press F4 and 1 simultaneously for first text and then only 1 for next text.
= date (day , month) and kWhs and windspeed from previous 60 days.

Press F4 and 2 simultaneously for first text and then only 2 for next text.
= date (day , month) and kWhs , windspeed and delevery hours in the previous 24 months.

Press F4 and 3 simultaneously for first text and then only 3 for next text.
= The last 200 alarms and reset times

Press RESET for the normal status display.

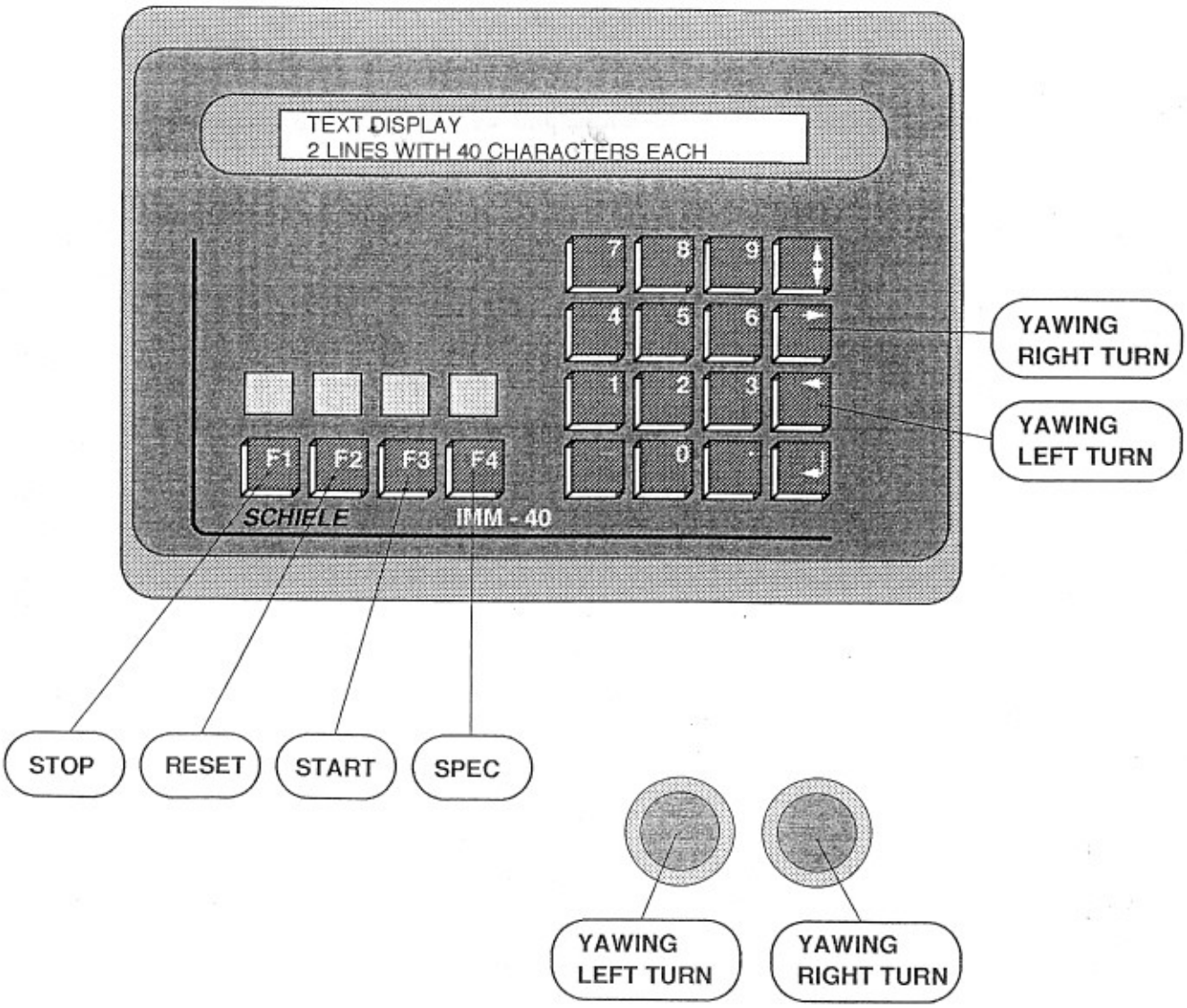

YAWING BUTTONS ONLY BY FAILURE OF CONTROLPANEL

Eurp. proj.	Benaming : **FRONTVIEW CONTROLPANEL IN CONTROLHOUSING**			Ref.: NEN - ISO 9001-4.5
LAGERWEY WINDTURBINE BV Hanzeweg 31 3771 NG Barneveld Tel.: 0342-422724 / Fax : 0342-422861	Opsteller: K.W.	Gekontroleerd: J.R.	Beheerder: J.R.	
	Nummer: E-ED-2063d	Blad : ..1..van..1...	Datum: 28-06-91	Wijz.: a : 09-01-92 b : 22-01-92 c : 05-06-92 d : 27-06-94

ALARM DESCRIPTION

If the display shows an alarm condition, follow the instructions,wich you can reed after this.
To return to normal text press F4 and not RESET.
If text reads that you should call Lagerwey, do not reset until you have called your dealer.
IMPORTANT: Only press RESET after you have followed all directions.

ALARMNR.	DISCRIPTION
1	" ALARM IMBALANCE" The wind mill has imbalance in the rotor. This will cause the turbine to YAW out of the wind. Check for ice or damage and consult your dealer.
2	" ALARM OVERSPEED" This will cause the turbine to YAW 110 degrees out of the wind. At this point a blade inspection should be done in consultation with your dealer. The display can be returned to normal by pressing the RESET key.
3	"ALARM INVERT.TEMP." The inverter is overheated. If this occurs, the turbine will YAW out of the wind and restart when the temperature is within normal range. The alarm will remain displayed on the screen. If alarm occurs a second time the turbine will not restart and the RESET key followed by the START key must be pushed. Clean all the air intakes (2) and be sure that fans are functioning (4), a few minutes after a restart is attemped, and mill generates power.
4	"ALARM INVERT. FAIL." The turbine will YAW out of the wind. Check all fuses and circuit breakers F3 and F4. Replace defective fuses and/or reset circuit breakers. Push the RESET key followed by the START key and turbine will restart. If the alarm reoccurs, the inverter must be checked. Call your dealer.
5	" ALARM GRID FAILURE" Supply grid error past or present. The turbine will, depending on windspeed, YAW until available voltage is unable to overcome friction on yaw gear. Some delay time is normal since capacitor bank must be full before voltage is rise. Turn main switch off and check for defective fuses and wether grid is normal. To restart, turn main switch on, press the RESET key and then the START key. The turbine will then measure the 10 minute average wind speed and start automatically if this reading is sufficient. To remove error display press RESET. If error reoccurs consult your dealer.

6 " ALARM Q2 IS OFF"
The fuse watching switch is tripped. The turbine will YAW out of the wind.
Replace the defective fast blow fuses with main switch off.
CAUTION: Fuses may be hot.
Reset the Q2 switch and turn main switch on. Press the RESET key and then the START key. The turbine will then measure the 10 average minute wind speed and start automatically if this reading is sufficient. If error reoccurs, consult your dealer.

7 " ALARM WIND SP.> 25."
Excessive wind. If the windspeed is or was greater than 25 m/sec for four seconds, the turbine will YAW out of the wind.
The turbine will restart automatically once the ten minute falls below 25m/sec.

8 "ALARM LOW BATTERY"
If this alarm displays, the battery needs to be replaced within one week by your dealer.
The turbine will YAW out of the wind.
Twelve hours of operation are still possible by pressing the RESET button.
After this twelve hours have elapsed, the turbine will once again YAW out of the wind and remain until this alarm situation is corrected.

9 " ALARM W.VANE sign. FAIL."
Windvane signal is loss. The turbine will use its EMERGENCY YAW CIRCUIT to turn out of the wind and still be connected with the main power supply. Press the RESET key, followed by the START key, to restart the turbine. If this does not work the windvane may be need to be serviced by your dealer.

10 "ALARM RPM sign.FAIL."
RPM signal is loss. In this case the turbine will YAW 110 degrees out of the wind.
Call your dealer to determine corrective procedure.

11 " ALARM W.S.sign.FAIL. "
Anemometer signal is loss. In this case the turbine will YAW out of the wind.
Call your dealer to determine corrective procedure.

12 "ALARM10 MIN. WIND"
The PLC is measuring the ten minute wind average.
If the average is below 25m/sec and above 3m/sec, the turbine will start automatically and the display will change to reflect what the mill is doing.

13 " ALARM YAW mot.FAIL."
Check and reset Q3 if necessary. Use the blue yaw drive keys to YAW the turbine into the wind.
If this fails or the relay trips again, call your dealer.
If successful press the RESET key, followed by the START key. The turbine will automatically YAW into the wind.
CAUTION: During the alarm the turbine will not attempt to YAW out of the wind, and if a second alarm occurs the turbine will attempt to engage the EMERGENCY YAW CIRCUIT and YAW of the wind as much as possible.

14 "ALARM K2 FAILURE"
K2 contacter does not close.The turbine will YAW out of the wind. Call your dealer to determine corrective procedure.

15 "ALARM CABLE TW.FAIL."
Outside limits of YAW operation or a micro-switch has failed.The turbine will YAW out of the wind. Call your dealer to determine corrective procedure

16 "ALARM K1 FAILURE"
K1 contactor does not close. The turbine will YAW out of the wind. Call your dealer to determine corrective procedure.

17 "ALARM MAX. POWER"
The power of the mill is to high.Call your dealer to determine corrective procedure.

18 "ROTOR BRAKE FAILURE"
The rotor brake doesn't work anymore when the turbine is out of the wind.
The turbine will YAW back to 90 degrees out of the wind, try to stop rotating.
Call your dealer to determine corrective procedure.

ALARM INSTRUCTION LIST

If there is a fuse(s) -failure and it must be replaced, the following numbering must be followed.

1. Stop the turbine by pressing the STOP key.
   If the turbine is yawing in emergency mode wait until the turbine has stopped its yawing before pressing any keys.
   NOTE: The rotor may be still be turning after emergency yaw procedure is complete
2. Turn OFF the main switch Q1
3. Using the proper tool remove and replace defective fuses.
   NOTE: Fuses may still be hot.
4. Turn Q1 on and press RESET followed by the START key.
5. The turbine will now measure the 10 minute wind speed.
   The display must be returned to normal.
6. If the wind speed fails within limits the turbine will restart automatically.

Elektrotechnical Program Adjustments.

LW 18/80 WD,AL

Part	Name	Type	Program	Value		
PLC	ID nr.	Identiety number		Each turbine has his own number (Standard = 5000)		
PLC	DELAY 1	LOW->HIGH		on 5	= 5	sec
PLC	DELAY 2	HIGH->WAIT		on 90	= 90	sec
PLC	DELAY 3	WAIT ->LOW		on 2	= 2	sec
PLC	DELAY 4	Disconnect.Cap.K2		on 100	= 100	sec
PLC	Windspeed 3	cut out limit		on 25	= 25	m/sec
PLC	Out of Wind 1	Degrees out of wind		on 115	= 115	Degrees
PLC	Time out off the wind after wind alarm	(10...720 min.)		on 10	= 10	min.
PLC	Windspeed 1	Yaw stop limit		on 2	= 2	m/sec
PLC	Windspeed 2	Cut in limit (0...25 m/s)		on 25	= 25	m/sec
PLC	RPM1	Cut in limit		on 60	= 60	RPM
PLC	Dead Angle	Windvane		on 10	= 10	Degrees
PLC	LOW / HIGH	Switchpoint		on 25	= 25	kW
PLC	0 kW	Adjustment 0 kW display		on 51	= 51	
PLC	Mill Type	C.T.Adjustment		on 80	= 150 / 5	
PLC	K 20	cut in piont K 20		on 35	= 35	kW
Relay	U 5	=DUR SP	hyst	on 0	= 0	% hystereses
			AC	on 0,2	= 100	Generator Volt.
			T	on 0	= 0	sec
Relay	F 8	=DUFRN	min	on - 5	= 5	% Undervoltage
		=DUFRN	max	on +10	= 10	% Overvoltage
			T	on 0	= 0	sec
Mutator PCB	U3	= Delta	low	on 135°	= 135°	Firing angle
		Delta	high	on 150°	= 150°	Firing angle
Protect.	Q 2	= Motor protection switch		on 0,1	= 0,1	Amp Fusecontrol
Protect	Q 3	= Motor protection switch		on 1,6	= 1,6	Amp Yawmotor
Timerelay	K 100	= VWS time sector		on 3 s		Pulstime
		value		on 30	= 3	sec
Timerelay	K 101	= ARS time sector		on 10 min		only with alarmdialer
		value		on 10	= 10	min alarmdial delay
Timerelay	K 102	= AHS time sector		on 100 s		W.D.switch off delay
		value		on 7	= 70	sec
Timerelay	K 103	= ERS time sector		on 3 s		W.D.switch on delay
		value		on 20	= 2	sec

EEPROM version: spdlh.23 spdlh.23 spdlhm.p24 spvrolyk.12 spwka.14

Benaming: ELECTRICAL ADJUSTMENTS LW 18/80 WD,AL

Ref.: NEN - ISO 9001 - 4.5

LAGERWEY WINDTURBINE BV
Hanzeweg 31
3771 NG Barneveld
Tel.: 0342-422724 / Fax : 0342-422861

Opsteller:	Gekontroleerd:	Beheerder:		
K.W.				
Nummer:	Blad:	Datum:	Wijz.:	a : 19-04-94
WI 4.9-1.3-1.10-32c-E	1 / 1	03-05-93		c : 30-05-95

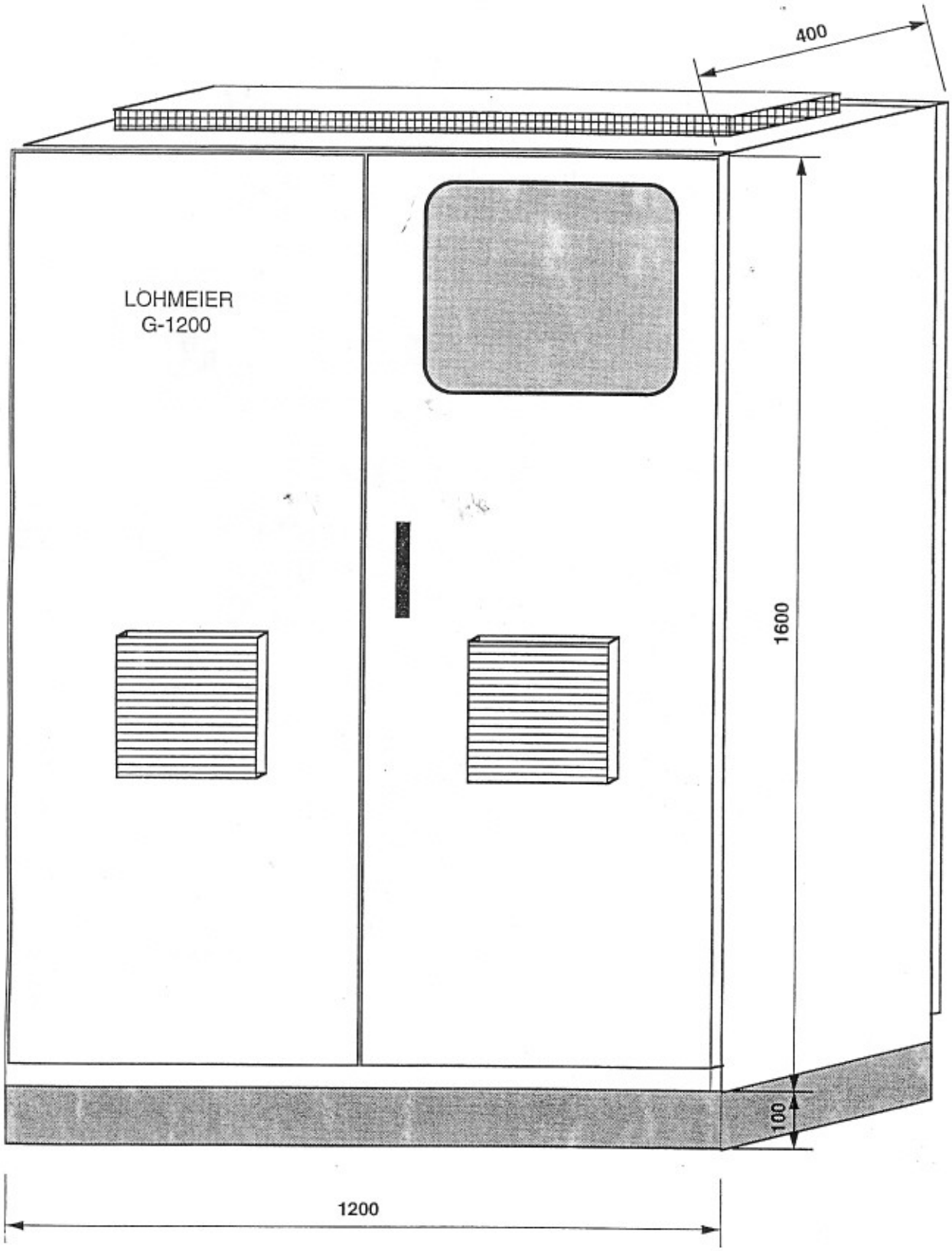

Eurp. proj.	Benaming : FRONTVIEW CONTROLHOUSING			Ref.: NEN - ISO 9001-4.5
LAGERWEY WINDTURBINE BV Hanzeweg 31 3771 NG Barneveld Tel.: 0342-422724 / Fax : 0342-422861	Opsteller: K.W.	Gekontroleerd: J.R.	Beheerder: J.R.	
	Nummer: E- ED-2061c	Blad : 1 van 1	Datum: 4-10-91	Wijz.: b : 07-10-92 c : 04-01-94

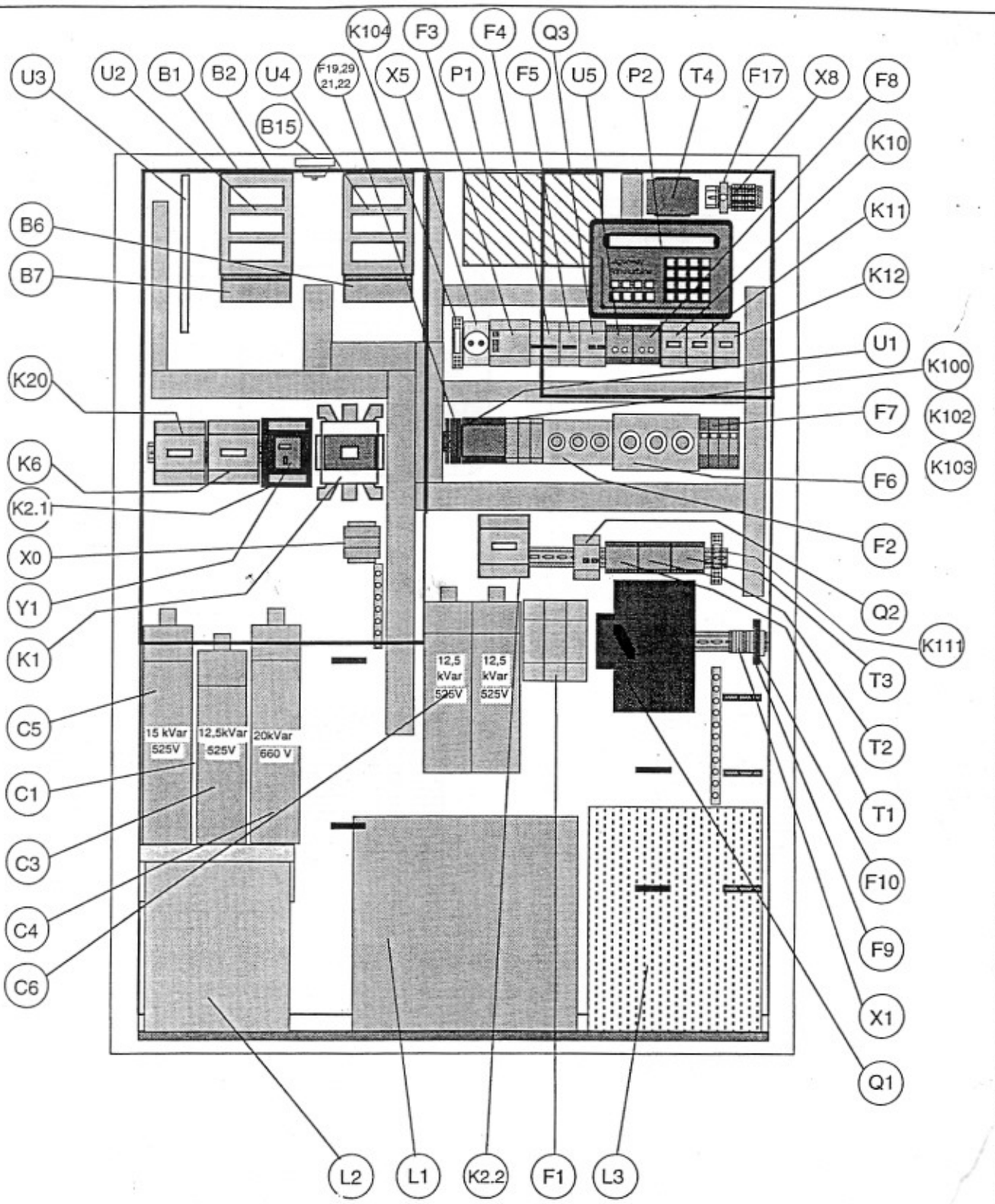

Eurp. proj.	Benaming : **GEOGRAPHY OF CONTROLHOUSING** + WATCH DOG RELAY Spec. filter 80 kW		Ref.: NEN - ISO 9001-4.5
LAGERWEY WINDTURBINE BV Postbus 279 3770 AG Barneveld Tel.: 0342-422724 / Fax : 0342-422861	Opsteller: K.W.	Gekontroleerd:	Beheerder:
	Nummer: E- ED-2248 80kW	Blad : 1 van 1	Datum: 01-05-95
			Wijz.:

DESCRIPTION COMPONENTS

Name	Description	Partnumber
B1	Temperatureswitch 90°C NC	E0147
B2	Temperatureswitch 60°C NO	E0148
B3	Anemometer	E2360
B4	Revolution counter	E2346
B5	Windvane	E2372 a
B6	Fan at Diode-cooler	E0061
B7	Fan at Mutatorcooler	E0061
B8	Fan at controlbox-door left	E0050,E0037
B9	Fan at controlbox-door right	E0050,E0037
C1	Capacitorbank Mainsfilter	E0273
C2	Capacitorbank Generator Delta-Low	E0282 a
C3	Capacitorbank Generator Delta-High	E0271,E0273
C4	Capacitorbank Generator Emergency Delta Low/High	E0286 b
C5	Capacitorbank Mainsfilter	E0270
C6	Capacitorbank Mainsfilter	E0273
E1	Heating chassis-controlbox	E0014
F1	Fuses Mutator superfast	E0182,E0481
F2	Fuses Controlsystem	E0490,E0750,E0780,E0810
F3	Earth leakage switch	E0471
F4	Tripcircuitbreaker 6 Amp. for measuring- and controlcircuit	E0460
F5	Tripcircuitbreaker 16 Amp. for controlcircuit	E0450
F6	Fuses Lightning -Arresters	E0500,E0760,E0790,E0820
F7	Lightning Arresters Mainsconnection	E0295
F8	Voltageprotection Relay Mainsconnection	E0252
F9,10	Overvoltageterminal D1,D2 Datawire at controlhousing	E0199
F11,12	Overvoltageterminal D1,D2 Datawire at chassiscontrolbox	E0199
F13,15,16	Overvoltageterminal Windvaneconnection at Chassiscontrolbox	E0199
F14	Overvoltageterminal + Windvaneconnection at Chassiscontrolbox	E0198
F17,18	Fuses Transformer	E1044,E2476
F19,20,21	Overvoltageterminal MWO. analog	E0199
F22	Overvoltageterminal MWO. digital	E0198
G1	Generator	

Eurp. proj.

Benaming :

ELECTRICAL DIAGRAM LW 18 / 80

Opties: 1 2 3 4 Filter 5

LAGERWEY WINDTURBINE BV
Hanzeweg 31
3771 NG Barneveld
Tel.: 0342 422724 / Fax : 0342 422861

Opsteller: K.W.

Gekontroleerd:

Beheerder:

Ref.: NEN - ISO 9001-4.5

Nummer: E- ES - 2116 -4 e

Blad : 1 of 11

Datum: 12-01-93

Wijz.: b : 05-01-94, c : 11-07-94, d : 24-10-94, e : 30-12-94

DESCRIPTION COMPONENTS

Name	Description	Partnumber
K1	Generator- Mutator Connection-relay	E2410
K2.1	Filter Capacitor-relay 1	E2380
K2.2	Filter Capacitor-relay 2	E2381
K6	Capacitor Relay for Delta-Low Generator	E2380
K10	Generator- Yawmotor Connection Relay	E2395,E2420
K11	Yawmotor Turn Left Relay	E2395,E2420
K12	Yawmotor Turn Right Relay	E2395,E2420
K20	Filter Capacitor-relay 3	E2403
K100	Watch-dog pulse relay	E3800
K102	Watch-dog switch off relay	E3805
K103	Watch-dog switch on relay	E3810
K104	help relay mutator-printed circuit board	E3820,E3821
L1	Filtercoil	E1631
L2	Commutationcoil	E1621
L3	Directcurrent Coil	E1640
L4	Filtercoil	E1632 ⚠
L5	Filtercoil	E1633 ⚠
L6	Filtercoil	E1634 ⚠
M1	Yawmotor	
P1	PLC in Controlhousing	E2330,E2340
P2	Controlpanel in Controlhousing	E2335,E2340
P3	PLC in Chassiscontrolbox	E2325
Q1	Mainswitch at Controlhousing	E0635,E0636
Q2	Fusescontrol-switch	E2438,E2439
Q3	Yawmotor Protection Switch	E2437
R1	Resistor 1kΩ kWh-Measuring Watt Transducer	E2470
R2	Resistor 500Ω Powermeasuring Watt Transducer	E2460
R3	Resistor 1kΩ for Anemometer	E2470

Eurp. proj.

Benaming : **ELECTRICAL DIAGRAM LW 18 / 80**

Opties: 1 2 3 4 Filter 5

LAGERWEY WINDTURBINE BV
Hanzeweg 31
3771 NG Barneveld
Tel.: 0342 422724 / Fax : 0342 422861

Opsteller: K.W. | Gekontroleerd: | Beheerder: | Ref.: NEN - ISO 9001-4.5

Nummer: E- ES - 2116 -4 e | Blad : 2 of 11 | Datum: 12-01-93 | Wijz.: b : 05-01-94, c : 11-07-94, d : 24-10-94, e : 30-12-94

DESCRIPTION COMPONENTS

Name	Description	Partnumber
S1	Imbalance-Switch	E0970,E1570
S2	Cabletwist Limitswitch End	┐
S3	Cabletwist Limitswitch Centre	├ E1530,E1540,E1560,E1580
S4	Cabletwist Limitswitch Leftturn	│
S5	Cabletwist Limitswitch Rightturn	┘
T1,2,3	Current Transformers for Powermeasuring	E0330
T4	Safety Transformer	E0019 △b
T5	Safety Transformer	E0019 △b
U1	Watt Transducer	E0265
U2	Mutator	E2442,E0140,E0061
U3	Mutator-Printed Circuit Board	E0194
U3.K1	Mutator disturbance relay	E0194
U4	Diode Bridge	E2451,E0140,E0061
U5	Filter Measuring Relay	E0261
X0	Terminalrow Star Capacitor Connection	E1020,E1030,E0982
X1	Terminalrow Controlhousing Cableconnection	E0980,E0990,E0199
X2	Terminalrow Tower-Junctionbox	E0205,E0206,E0981,E0990,E1040,E1070
X3	Terminalrow Tower-Junctionbox Dataleads D1 ,D2	E0980,E0982,E0990
X4	Terminalrow Chassis-Controlbox	E0980,E0982,E0990,E1051,E1052,E0199
X5	Socket-Outlet Controlhousing	E0829
X6	Socket Outlet Chassis-Controlbox	E0829
X7	Terminalrow Revolutioncounter at Chassis-Controlbox	E0980,E0982
X9	Terminalrow Controlhousing Cableconnection	E0199 △c
Y1	K2 Disconnecting Coil On-Position Latch	E2385

Eurp. proj.	Benaming :	Opties: 1 2	3 4 5

LAGERWEY WINDTURBINE BV
Hanzeweg 31
3771 NG Barneveld
Tel.: 0342 422724 / Fax : 0342 422861

Opsteller:	Gekontroleerd:	Beheerder:	Ref.:
K.W.	W.		NEN - ISO 9001-4.5

Nummer:	Blad :	Datum:	Wijz.:
E- ES - 2116 -4 e	3 of 11	12-01-93	b : 05-01-94 c : 11-07-94 d : 24-10-94 e : 30-12-94

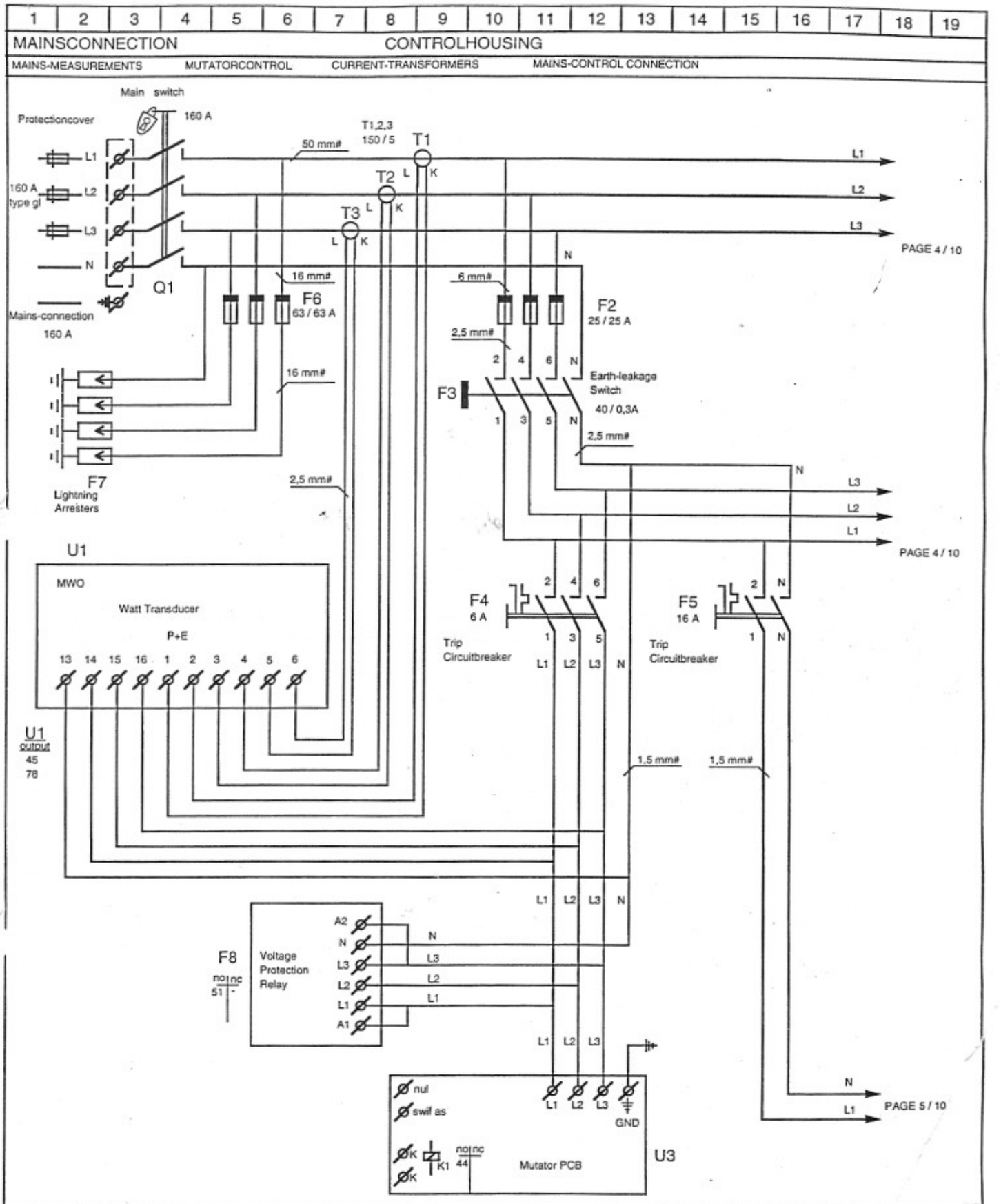

Eurp. proj.	Benaming : **ELECTRICAL DIAGRAM LW 18 / 80**			Opties: 1 2	3 4 5
LAGERWEY WINDTURBINE BV Hanzeweg 31 3771 NG Barneveld Tel.: 0342 422724 / Fax : 0342 422861	Opsteller: K.W.	Gekontroleerd:	Beheerder:	Ref.: NEN - ISO 9001-4.5	
	Nummer: E- ES - 2116 -4 e	Blad : 4 of 11	Datum: 12-01-93	Wijz.:	b : 05-01-94 c : 11-07-94 d : 24-10-94 e : 30-12-94

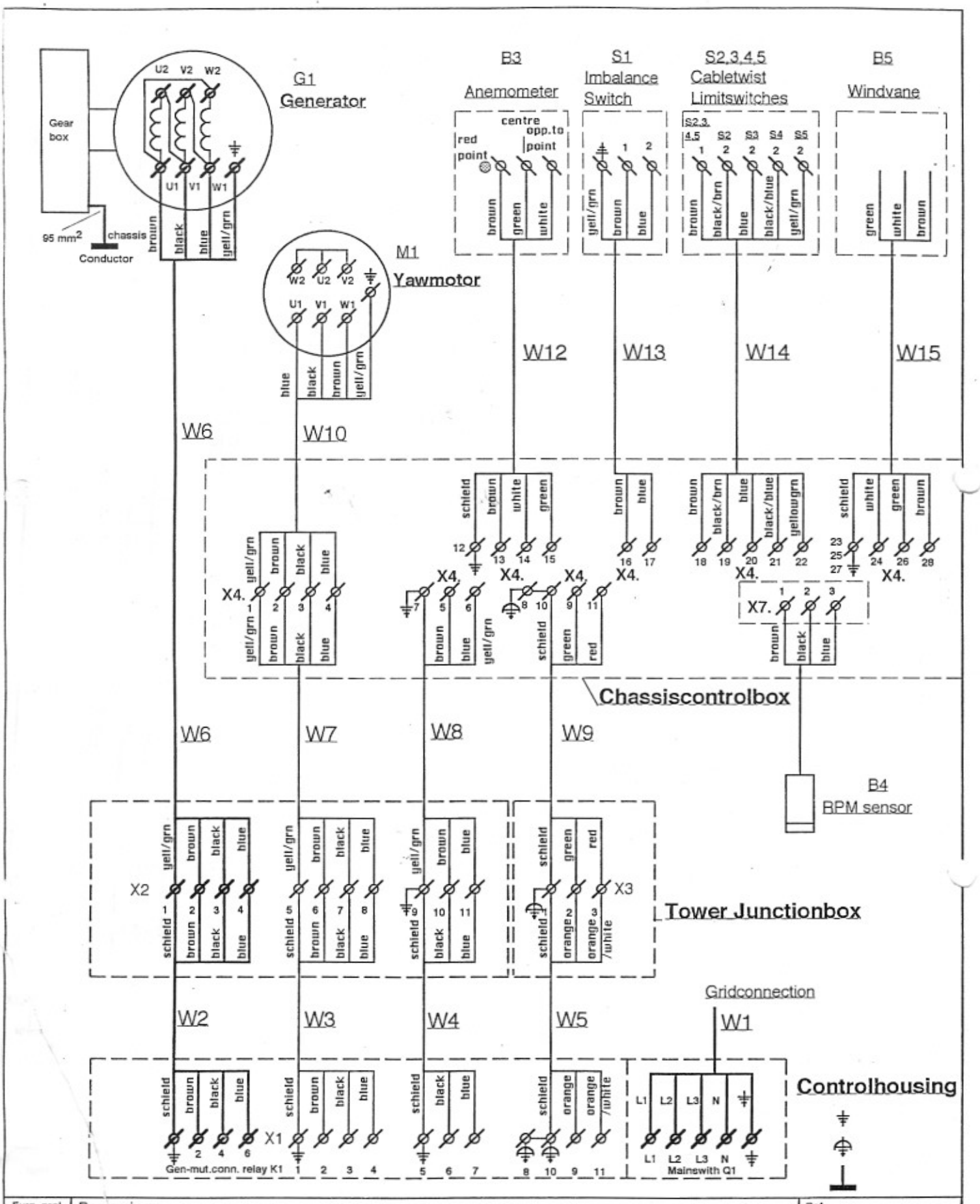

Eurp. proj.	Benaming :	Ref.:
	CONNECTIONS DIAGRAM LW 50/75/80	NEN - ISO 9001-4.5

LAGERWEY WINDTURBINE BV
Hanzeweg 31
3771 NG Barneveld
Tel.: 0342-422724 / Fax : 0342-422861

Opsteller:	Gekontroleerd:	Beheerder:
K.W.	J.R.	J.R.

Nummer:	Blad :	Datum:	Wijz.:
E-EA - 2090c	...1...van...1...	02-07-'92	a : 26-01-93 b : 24-2-94 c : 10-10-94

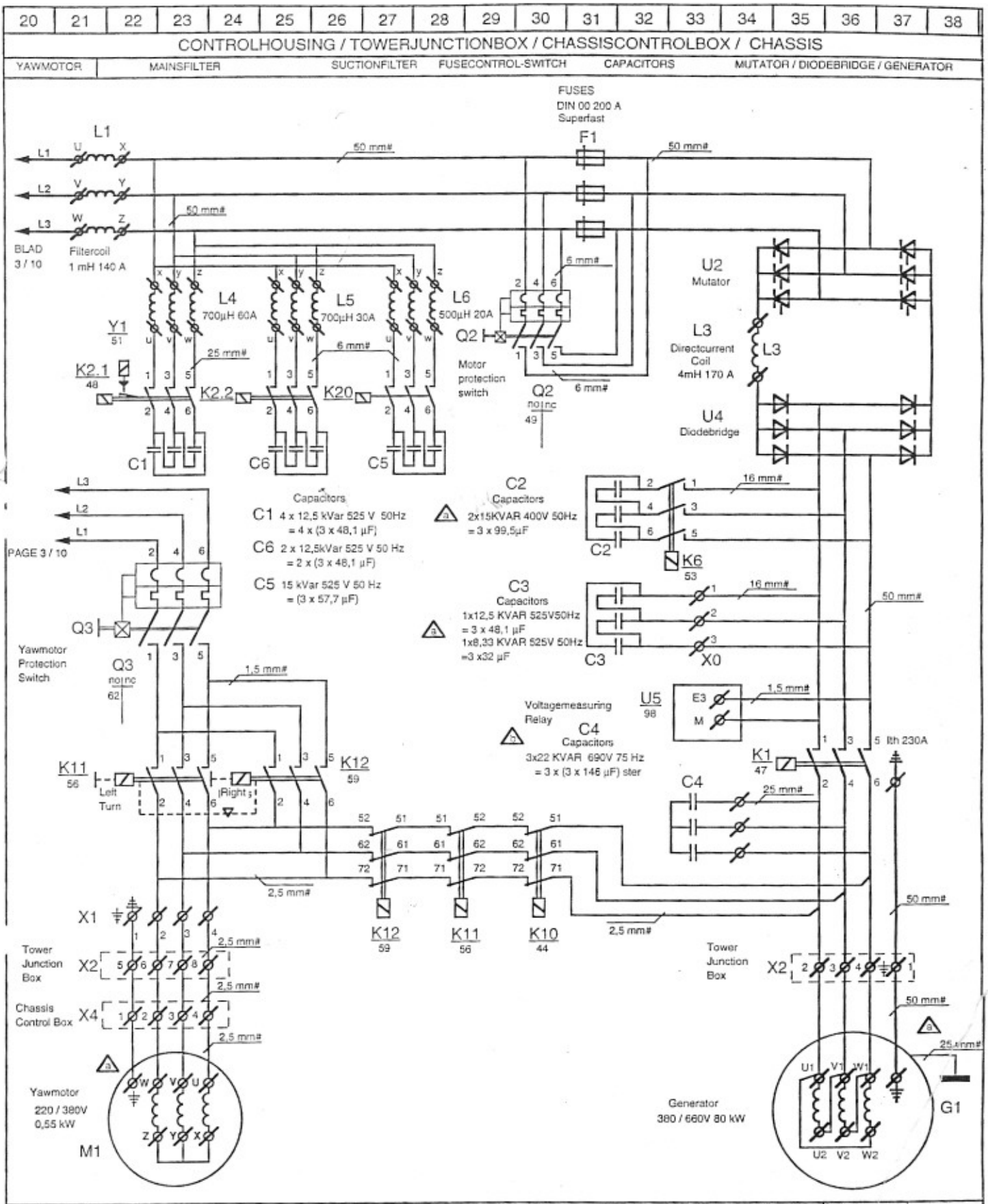

Eurp. proj.	Benaming :	Opties: 1 2	3 4 Filter 5
	ELECTRICAL DIAGRAM LW 18 / 80		

LAGERWEY WINDTURBINE BV
Hanzeweg 31
3771 NG Barneveld
Tel.: 0342 422724 / Fax : 0342 422861

Opsteller:	Gekontroleerd:	Beheerder:	Ref.:
K.W.			NEN - ISO 9001-4.5

Nummer:	Blad :	Datum:	Wijz.:	
E- ES - 2116 -4 e	5 of 11	12-01-93		b : 05-01-94 c : 11-07-94 d : 24-10-94 e : 30-12-94

39	40	41	42	43	44	45	46	47	48	49	50	51	52	53	54	55	56	57

SUPPLY 220V	CONTROLHOUSING PLC P1- IN and OUTPUTS							
INPUT'S :	24 V SUPPLY		KWH MEASURING	MUTATOR	FUSE AND MAINS CONTROL	GEN.-MUT.CONN.	MUTATORTEMPERATURE CONTR.	
OUTPUT'S :	GEN.-YAWMOT.CONN.	GEN.-MUT.CONN.	FILTERCAP.(DIS)CONNECTION	DELTA-CAP.-low	YAWING LEFT-TURN			

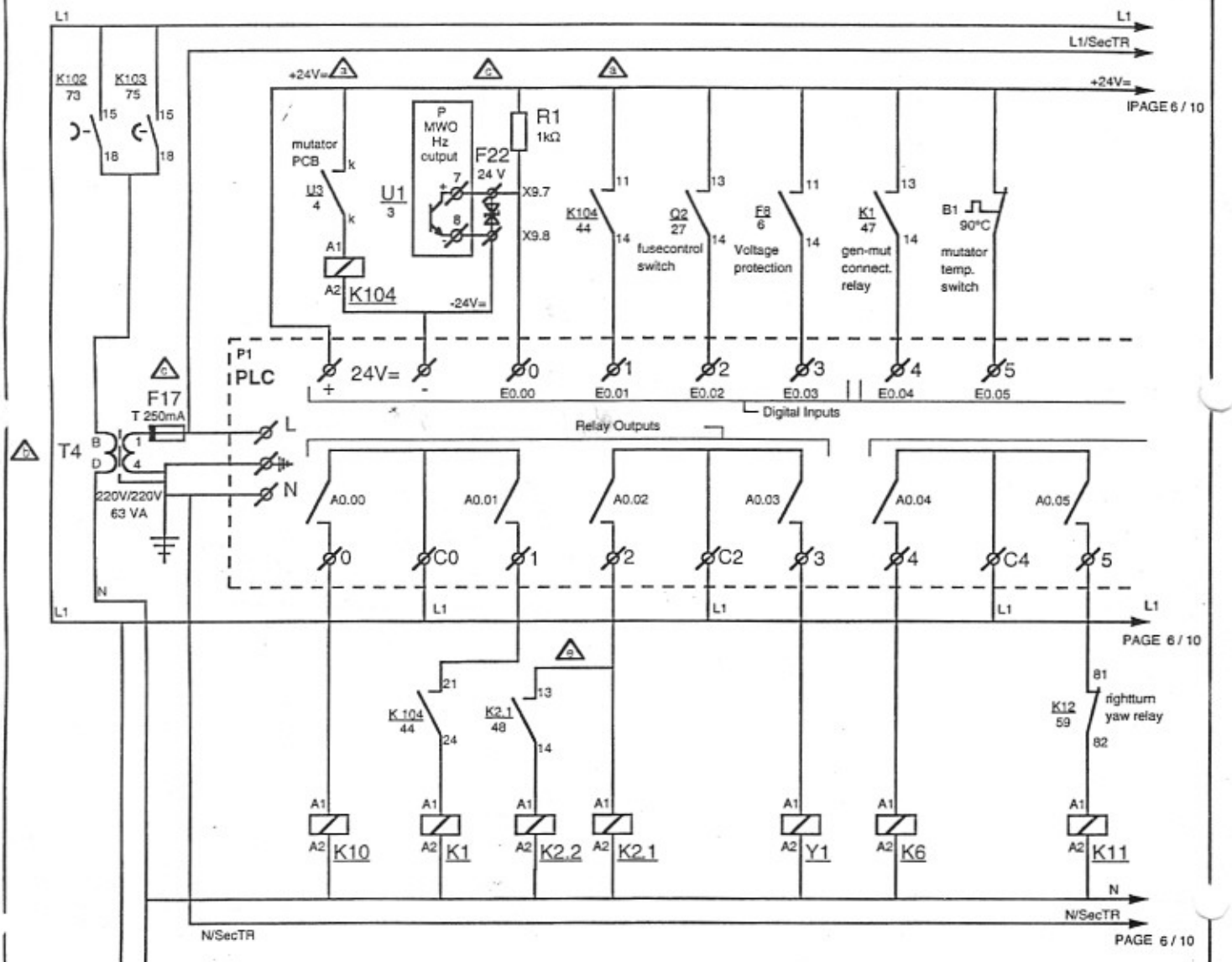

	Generator-Yawmotor Connection Relay	Generator-Mutator Couplingrelay	Filter Capacitor Relay 1	Filter Capacitor Relay 2	Disconnecting Coil on K2	Delta Capacitor Relay - low	Left turn Yaw relay
	K104	K10	K1	K2.2	K2.1	Y1	K6	K11
no	47 48	- -	- - - -	35 36 36 53 -	25 25 26 60 -	22 23 23 47 -	23	33 33 33 -	22 23 23 -
nc	- -	30 30 30 -	-	-	-	-			28 28 28 59

Eurp. proj.	Benaming :	Opties:	
	ELECTRICAL DIAGRAM LW 18 / 80	1 2	3 4 Filter 5

LAGERWEY WINDTURBINE BV Hanzeweg 31 3771 NG Barneveld Tel.: 0342 422724 / Fax : 0342 422861	Opsteller: K.W.	Gekontroleerd:	Beheerder:	Ref.: NEN - ISO 9001-4.5
	Nummer: E- ES - 2116 -4 e	Blad : 6 of 11	Datum: 12-01-93	Wijz.: b : 05-01-94 c : 11-07-94 d : 24-10-94 e : 30-12-94

58	59	60	61	62	63	64	65	66	67	68	69	70	71	72	73	74	75	76

CONTROLHOUSING PLC P1- IN and OUTPUTS

GEN.VOLTAGE.MEAS. FILTER IN

YAWING RIGHT-TURN WATCH DOG

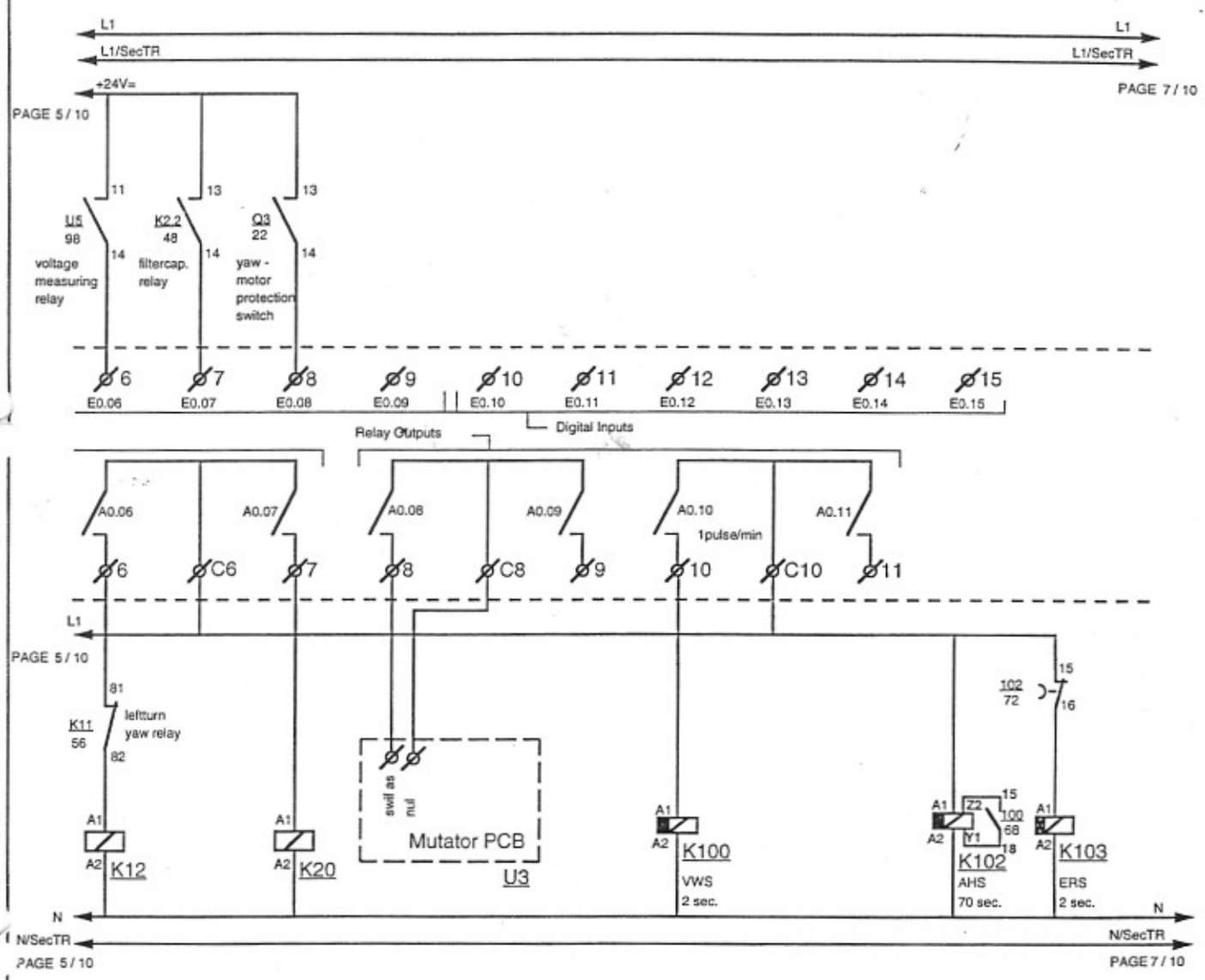

Right turn Yaw relay

K12

no	nc
25	27
25	27
26	27
-	56

Filter Capacitor Relay 3

K20

no	nc
27	-
28	-
28	-
-	-

One shot switch relay

K100

no	nc
73	-
-	-
-	-
-	-

Watch-dog switch off supply

K102

no	nc
42	74
-	-
-	-
-	-

Watch-dog switch on supply

K103

no	nc
43	-
-	-
-	-
-	-

Eurp. proj.

Benaming :

ELECTRICAL DIAGRAM LW 18 / 80

Opties: 1 2 3 4 Filter 5

LAGERWEY WINDTURBINE BV

Hanzeweg 31
3771 NG Barneveld
Tel.: 0342 422724 / Fax : 0342 422861

Opsteller:	Gekontroleerd:	Beheerder:	Ref.:
K.W.			NEN - ISO 9001-4.5

Nummer:	Blad :	Datum:	Wijz.:
E- ES - 2116 -4 e	7 of 11	12-01-93	b : 05-01-94 c : 11-07-94 d : 24-10-94 e : 30-12-94

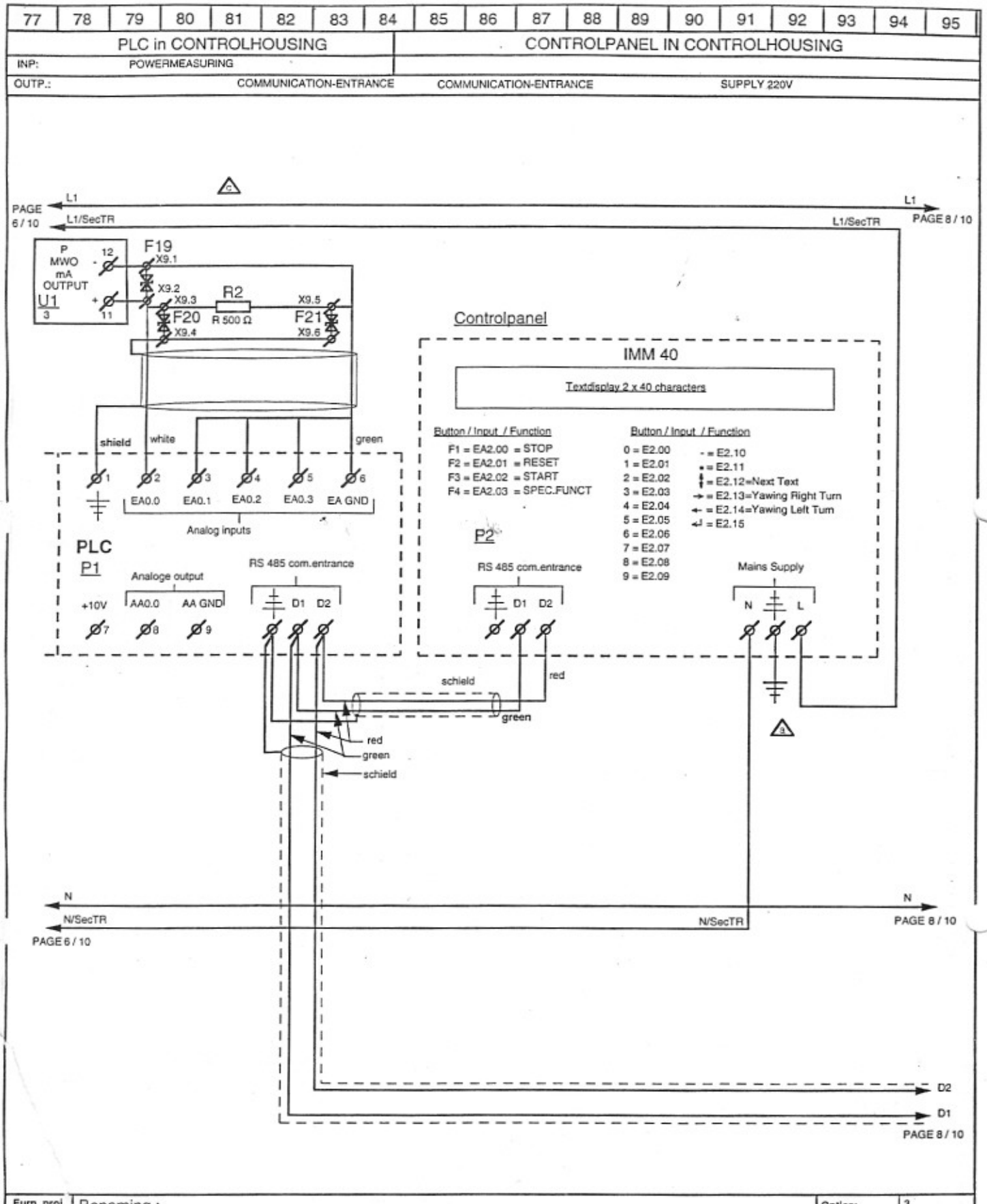

Eurp. proj.

Benaming :

ELECTRICAL DIAGRAM LW 18 / 80

Opties: 1 2 3 4 5

LAGERWEY WINDTURBINE BV

Hanzeweg 31
3771 NG Barneveld
Tel.: 0342 422724 / Fax : 0342 422861

Opsteller:	Gekontroleerd:	Beheerder:	Ref.:
K.W.	W.		NEN - ISO 9001-4.5

Nummer:	Blad :	Datum:	Wijz.:
E- ES - 2116 -4 e	8 of 11	12-01-93	b : 05-01-94 c : 11-07-94 d : 24-10-94 e : 30-12-94

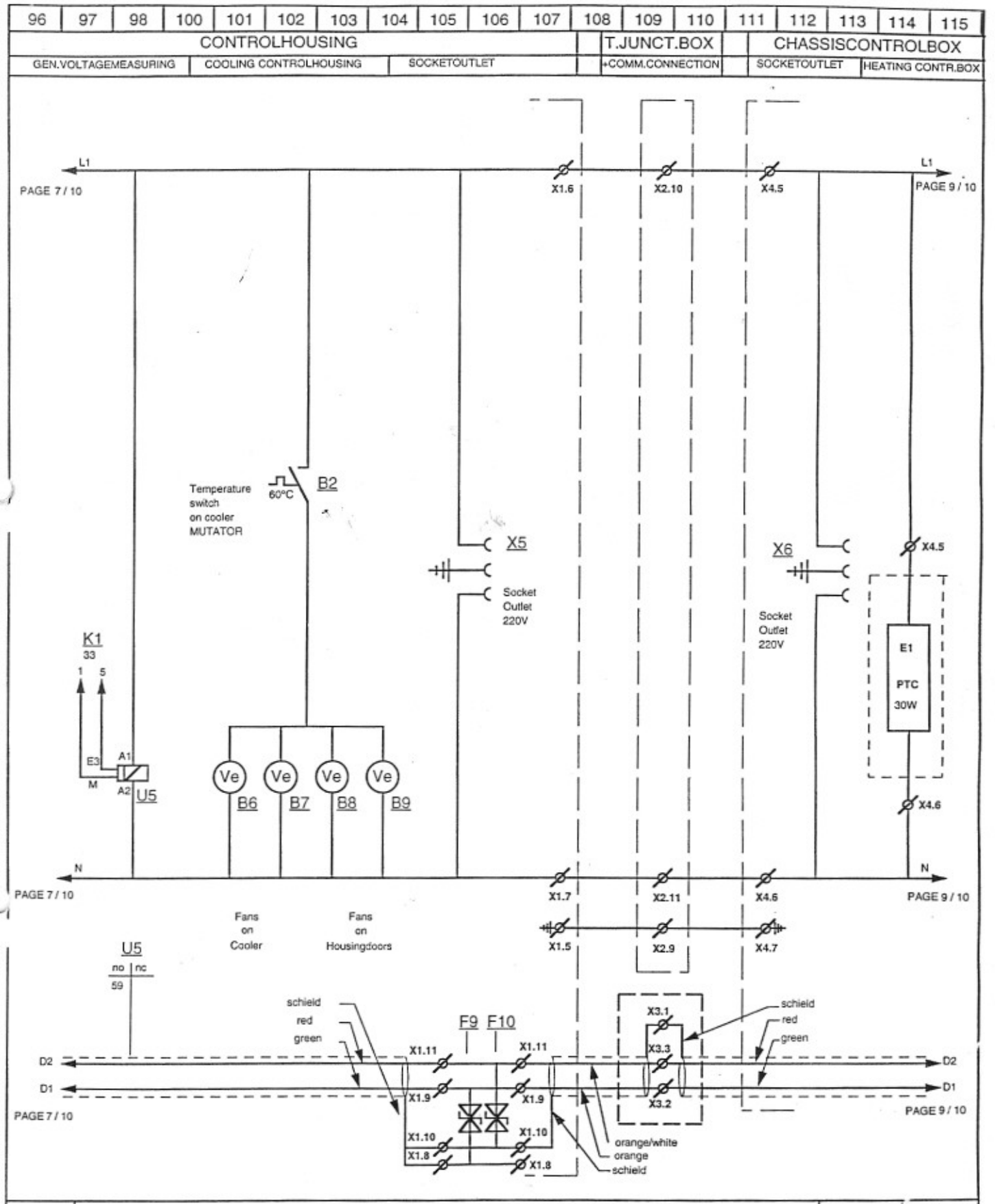

Eurp. proj.	Benaming : **ELECTRICAL DIAGRAM LW 18 / 80**		Opties: 1 2 3 4 5	
LAGERWEY WINDTURBINE BV Hanzeweg 31 3771 NG Barneveld Tel.: 0342 422724 / Fax : 0342 422861	Opsteller: K.W.	Gekontroleerd:	Beheerder:	Ref.: NEN - ISO 9001-4.5
	Nummer: E- ES - 2116 -4 e	Blad : 9 of 11	Datum: 12-01-93	Wijz.: b : 05-01-94 c : 11-07-94 d : 24-10-94 e : 30-12-94

116	117	118	119	120	121	122	123	124	125	126	127	128	129	130	131	132	133	134

PLC in CHASSISCONTROLBOX

INP: 220V | 24 V SUPPLY | ANEMOMETER | IMBALANCE | RPM MEASURING | CABLETWIST LIMITSWITCHES

OUTP:

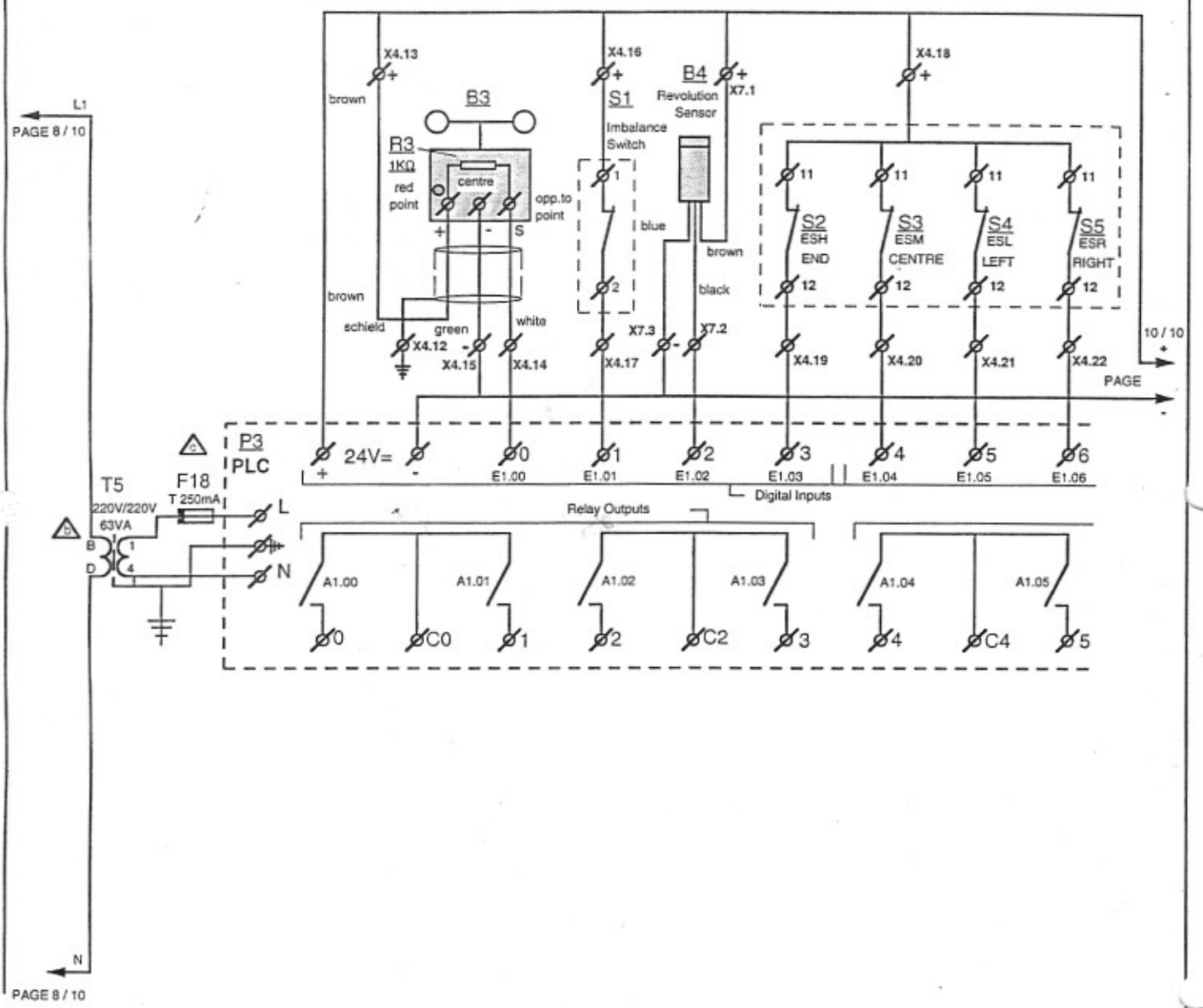

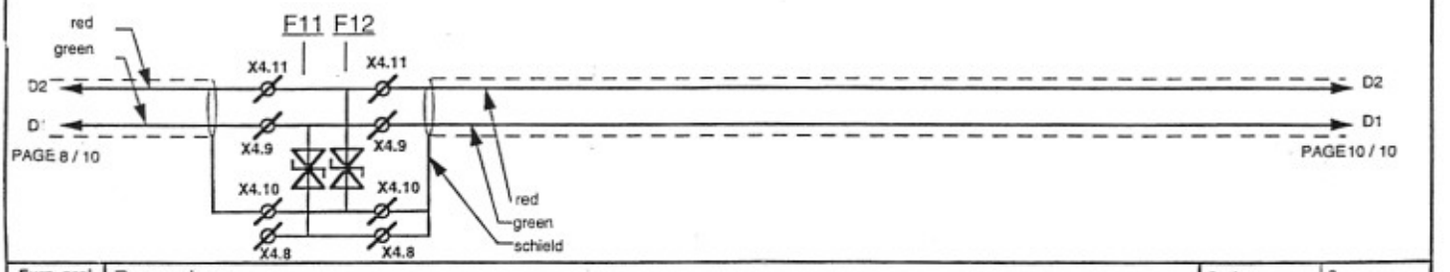

Eurp. proj.	Benaming : **ELECTRICAL DIAGRAM LW 18 / 80**		Opties: 1 2 3 4 5	
LAGERWEY WINDTURBINE BV Hanzeweg 31 3771 NG Barneveld Tel.: 0342 422724 / Fax : 0342 422861	Opsteller: K.W.	Gekontroleerd:	Beheerder:	Ref.: NEN - ISO 9001-4.5
	Nummer: E- ES - 2116 -4 e	Blad: 10 of 11	Datum: 12-01-93	Wijz.: b : 05-01-94 c : 11-07-94 d : 24-10-94 e : 30-12-94

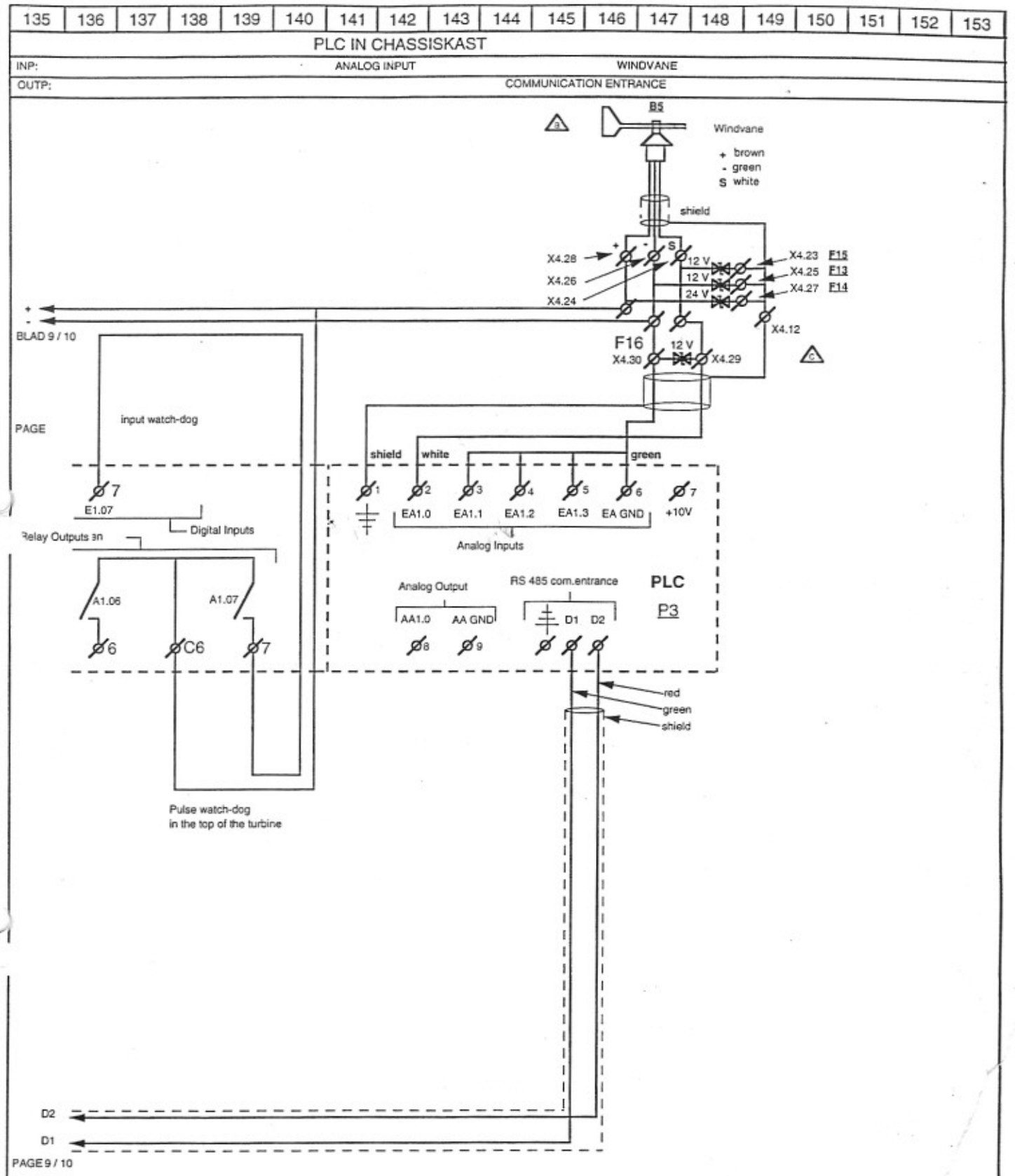

Eurp. proj.	Benaming : **ELECTRICAL DIAGRAM LW 18 / 80**			Opties: 1 2 3 4 5
LAGERWEY WINDTURBINE BV Hanzeweg 31 3771 NG Barneveld Tel.: 0342 422724 / Fax : 0342 422861	Opsteller: K.W.	Gekontroleerd:	Beheerder:	Ref.: NEN - ISO 9001-4.5
	Nummer: E- ES - 2116 -4 e	Blad: 11 of 11	Datum: 12-01-93	Wijz.: b : 05-01-94 c : 11-07-94 d : 24-10-94 e : 30-12-94

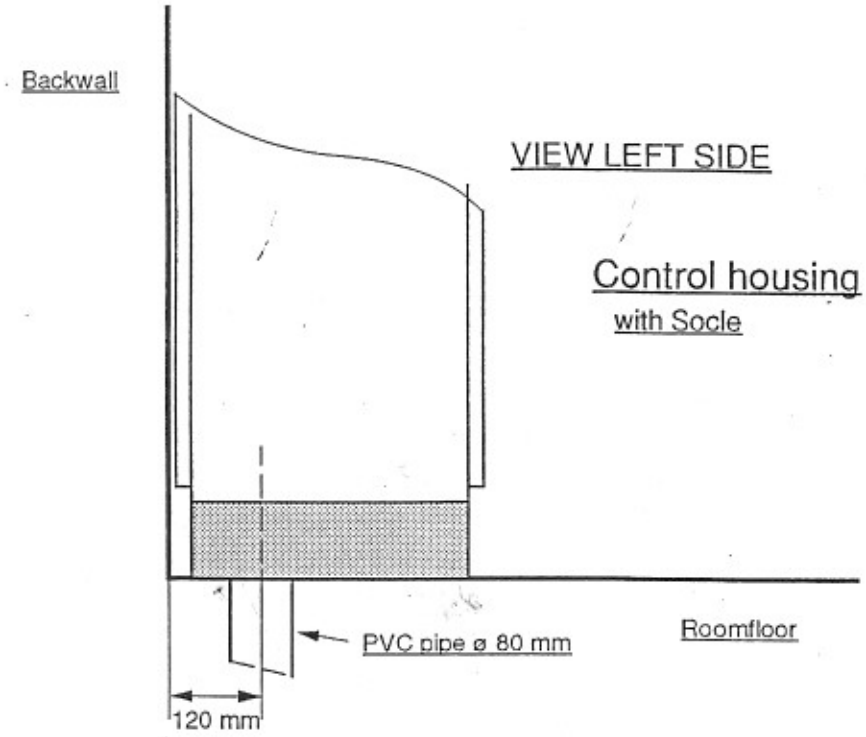

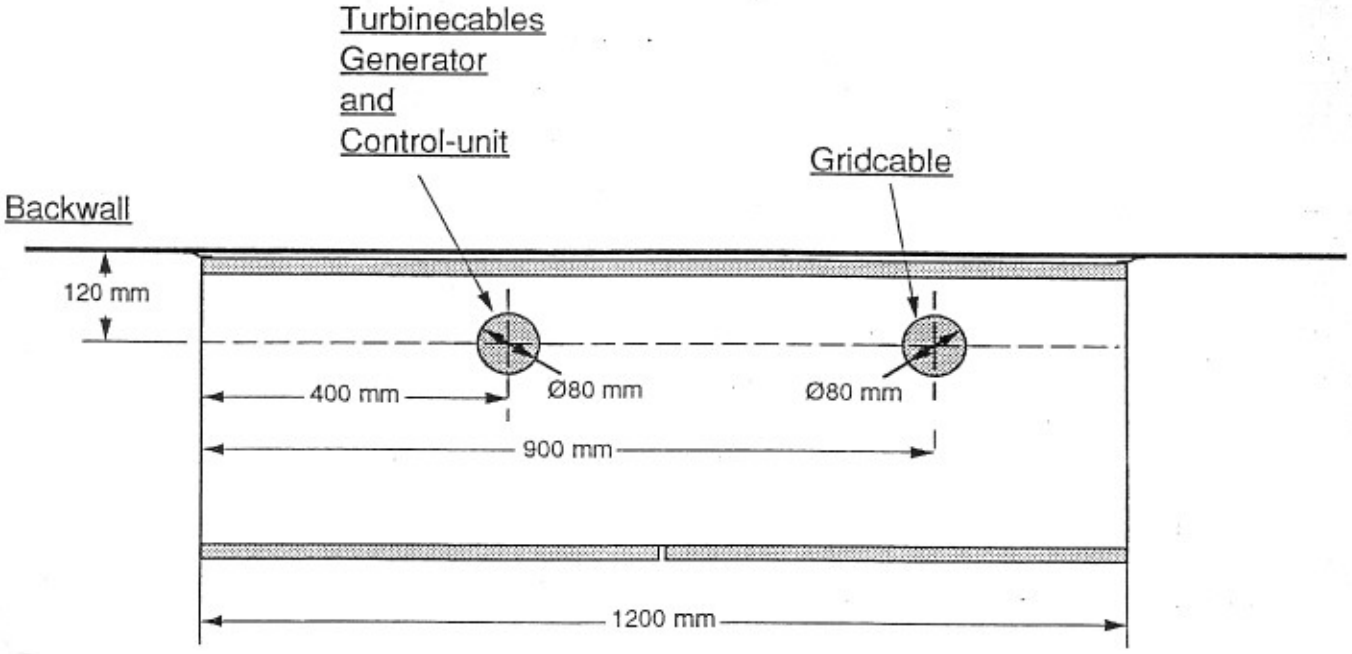

VIEW UPPER SIDE

Controlhousing

Eurp. proj.	Benaming : **HOLES IN FLOOR FOR THE CONTROLHOUSING**		Ref.: NEN - ISO 9001-4.5
LAGERWEY WINDTURBINE BV Hanzeweg 31 3771 NG Barneveld Tel.: 0342-422724 / Fax : 0342-422861	Opsteller: K.W.	Gekontroleerd: J.R.	Beheerder: J.R.
	Nummer: **E-ED-2069a**	Blad : 1 van 1	Datum: 29-8-91
	Wijz.:	a : 17-02-93	

Diagram option smokedetector 80 kW (fat printed)

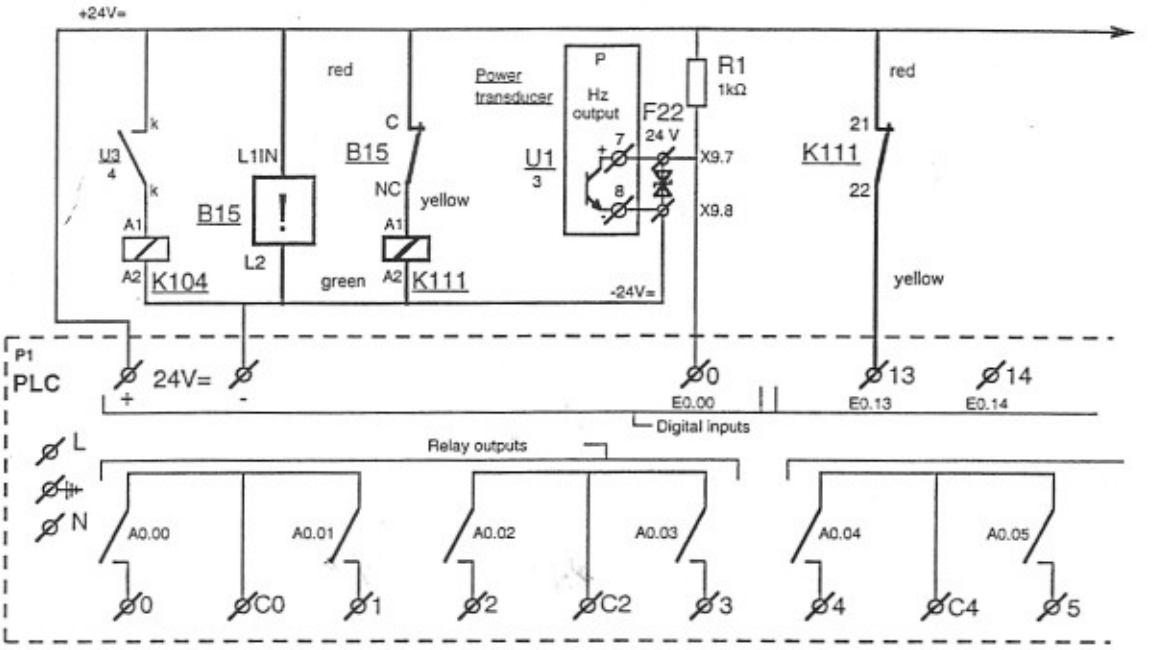

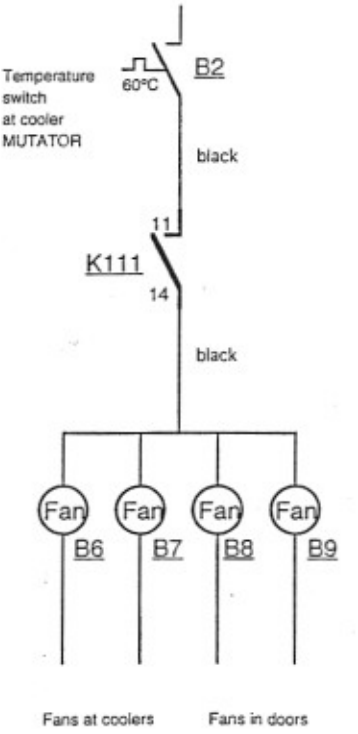

Eurp. proj.	Benaming : Wiring diagram Smoke detector 80 kW Plc			Ref.: NEN - ISO 9001-4.5
LAGERWEY WINDTURBINE BV Postbus 279 3770 AG Barneveld Tel.: 0342-422724 / Fax : 0342-422861	Opsteller: W.J.	Gekontroleerd:	Beheerder:	
	Nummer: E- EB-2321	Blad : 1 / 1	Datum: 09-11-95	Wijz.:

Capacitor-Coil utilization ABB generator for LW 18/80 with suction filter

Generator:	three-phase short-circuited-armature	Voltage:	400 V
Type:	M2CA 280 SA-4	Freq.:	50 Hz
Power:	75 kW	Efficiency full load:	94,6 %
Kind of operation:	S1	Cos phi full load:	0,84
Nominal revolutions:	1483 rpm	Isolation material:	class: F
Nominal torque:	482,9 Nm	Ambient temp.:	40° C
Nominal current:	136,2 A	Protection:	IP 55
Startcurrent (Is/In):	6,9		

Cap.:	Type:	Volt.:	Freq:	Cap.:	Conn.:	Numb:	Mark:	Function:
C1	12,5 kVar	525 V	50 Hz	3X48,1 µF	delta	4	Esta	Suctionfilter
C2	15 kVar	400 V	50 Hz	3X99,5 µF	delta	1	Esta	Delta low
	8,33 kVar	525 V	50 Hz	3X32 µF	delta	1	Esta	Delta low
C3	12,5 kVar	525 V	50 Hz	3X48,1 µF	delta	1	Esta	Delta high
C4	22 kVar	693 V	75 Hz	3X146 µF	star	3	Esta	Emergency yawing
C5	15 kVar	525 V	50 Hz	3X57,7 µF	delta	1	Esta	Suctionfilter
C6	12,5 kVar	525 V	50 Hz	3X48,1 µF	delta	2	Esta	Suctionfilter

Part nr.:	Cap.:		
50282	15 kVar	400 V	50 Hz
50271	8,33 kVar	525 V	50 Hz
50273	12,5 kVar	525 V	50 Hz
50270	15 kVar	525 V	50 Hz
50286	22 kVar	693 V	75 Hz

Diagram : EB-.....

Benaming	Capacitor utilization LW 18/80 with ABB generator.			Ref.: NEN - ISO 9001 - 4.5	
LAGERWEY WINDTURBINE BV Postbus 279 3770 AG Barneveld Tel.: 0342 422724 / Fax : 0342 422861	Opsteller : W.J.	Gekontroleerd :	Beheerder :		
	Nummer : WI 4.9-1.3-1.5-07-E	Blad : 1 / 1	Datum : 20-02-95	Wijz.:	

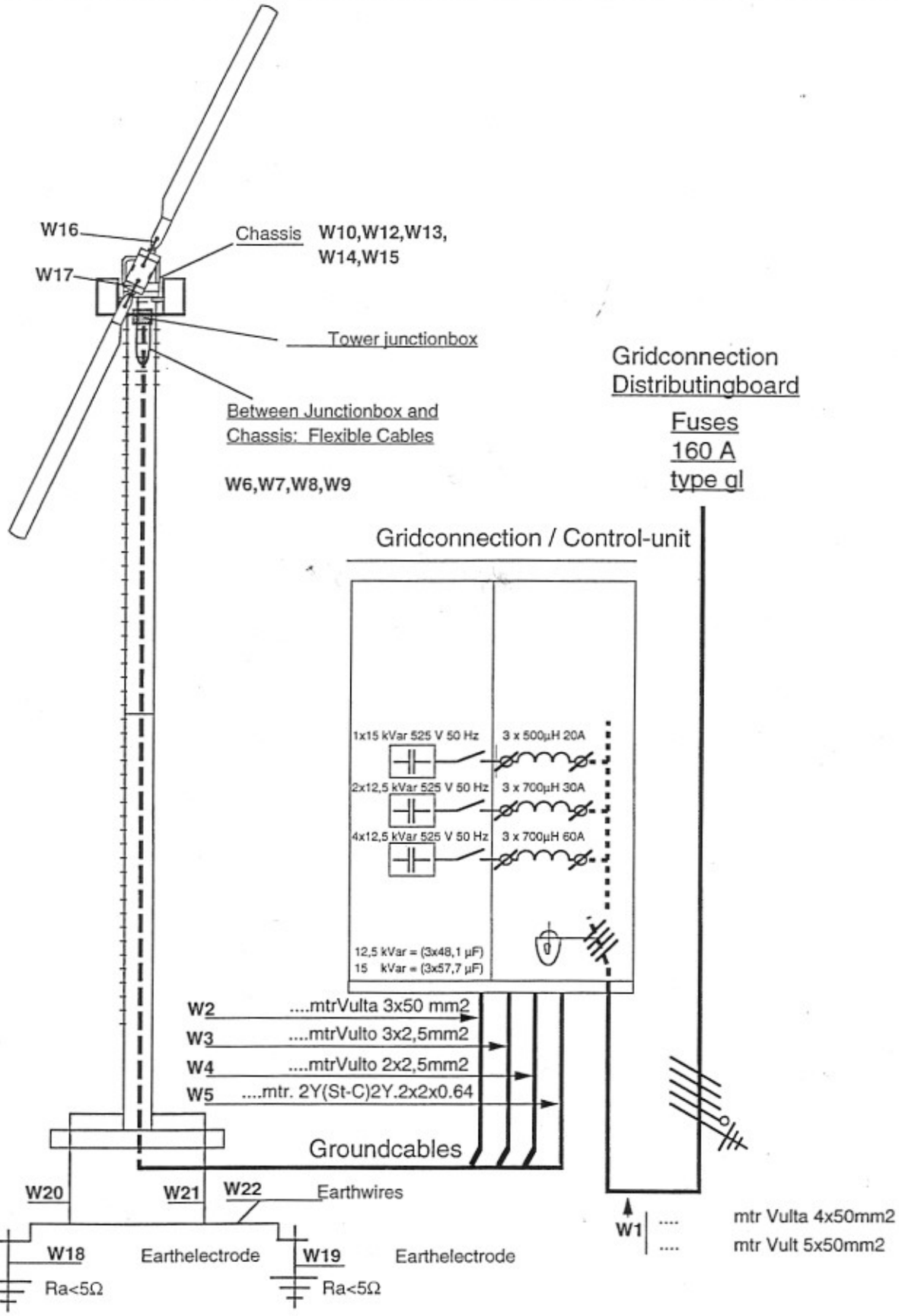

Proj nr.:	Proj. :	
Eurp. proj.	Benaming : **Gridconnection LW 80** speciaal netfilter	Ref.: NEN - ISO 9001-4.5

LAGERWEY WINDTURBINE BV
Hanzeweg 31
3770 NG Barneveld
Tel.: 0342 422724 / Fax : 0342 422861

Opsteller:	Gekontroleerd:	Beheerder:
K.W.		

Nummer:	Blad :	Datum:	Wijz.:	
E-EN- 2082c	1 ...1...van...1...	21-10-91		a : 8-10-92 b : 9-12-93 c : 20-1-95

Wire Number	Type	Function	Partnumber 12-06-96
W1	(Ground)cable	Gridconnection	~~E1201~~ of ~~E2000~~ 52101
W2	Groundcable	Generator connection	E2100
W3	Groundcable	Yawmotor connection	E2110
W4	Groundcable	Chassiscontrolbox supply	E2109
W5	Groundcable	Datacommunication	E1815
W6	Flexible cable	Generator connection	E1790
W7	Flexible cable	Yawmotor connection	E1830
W8	Flexible cable	Chassiscontrolbox supply	E1830
W9	Flexible cable	Datacommunication	E1816
W10	Flexible cable	Yawmotor connection	E1830
W12	Flexible cable	Anemometerconnection	E1813
W13	Flexible cable	Imbalance switch connection	E1820
W14	Flexible cable	Cabletwist limitswitch connection	E1822
W15	Flexible cable	Windvane connection	E1813
W16	Flexible wire	Earthwire blade	E1771
W17	Flexible wire	Earthwire blade	E1771
W18	Earthelectrode	Lightning conductor tower	E1960
W19	Earthelectrode	Lightning conductor tower	E1960
W20	Solid copperwire	Tower-Lightn.cond.connection	E1990
W21	Solid copperwire	Tower-Lightn.cond.connection	E1990
W22	Solid copperwire	Ringwire round Foundation	E1990

Eurp. proj.

Benaming : **WIRE AND CABLE LIST LW 75/80 DLH**

Ref.: NEN - ISO 9001-4.5

LAGERWEY WINDTURBINE BV
Hanzeweg 31
3771 NG Barneveld
Tel.: 0342-422724 / Fax : 0342-422861

Opsteller:	Gekontroleerd:	Beheerder:
K.W.	J.R.	J.R.

Nummer:	Blad :	Datum:	Wijz.:
E-EL-2091	...1...van...1...	03-07-'92	

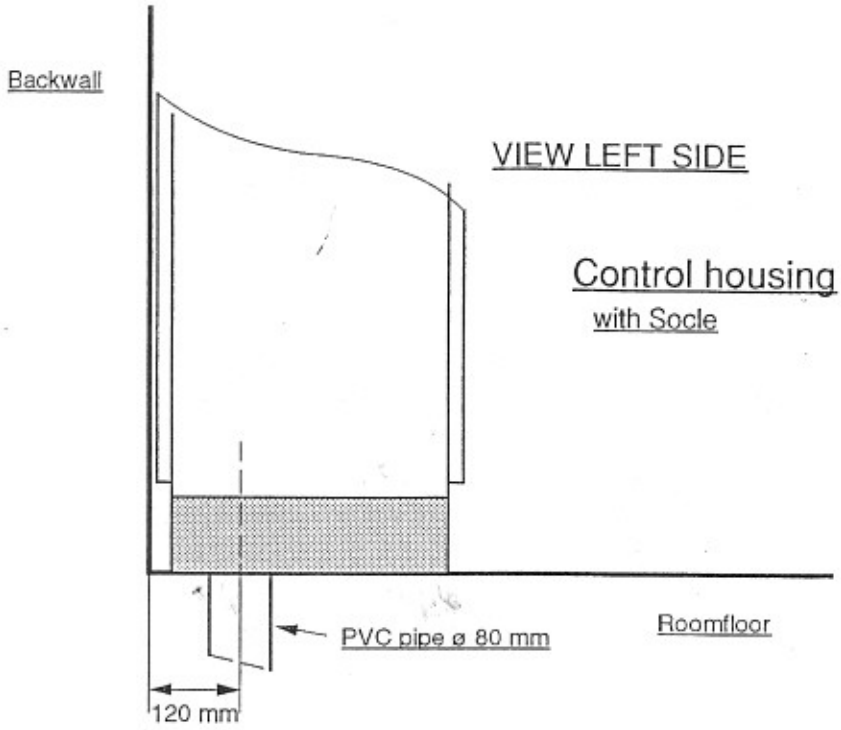

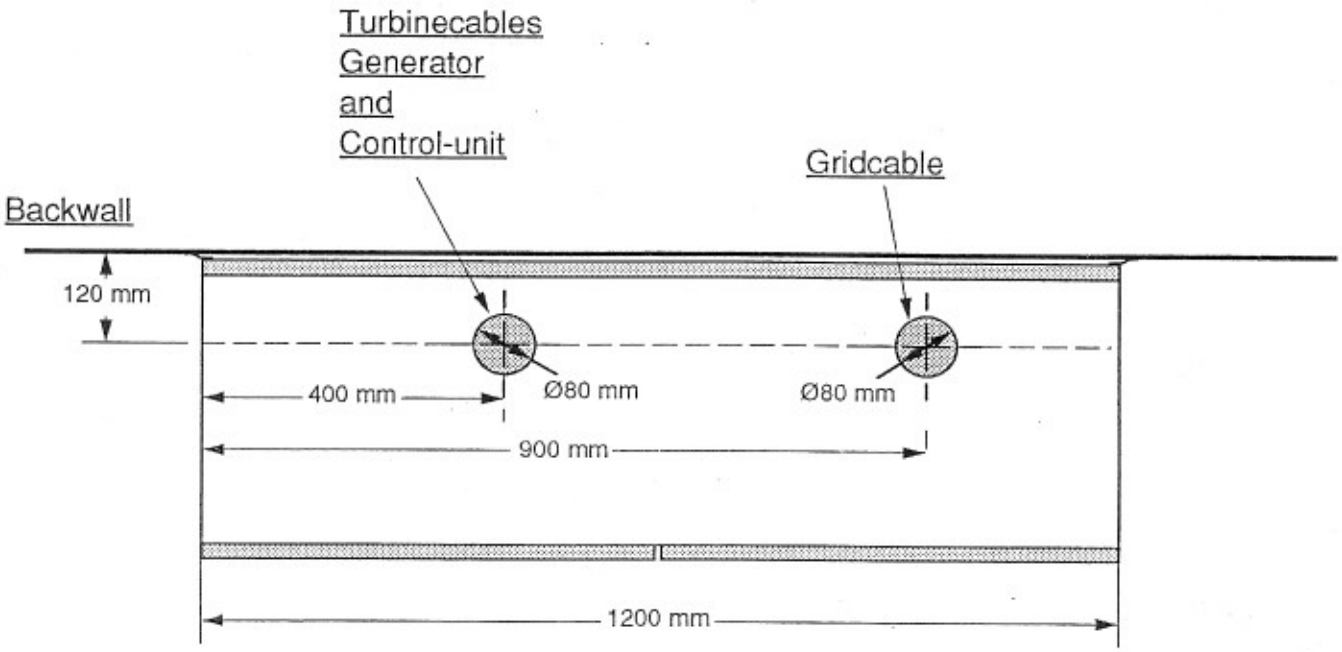

VIEW UPPER SIDE

Controlhousing

Eurp. proj.	Benaming : **HOLES IN FLOOR FOR THE CONTROLHOUSING**			Ref.: NEN - ISO 9001-4.5
LAGERWEY WINDTURBINE BV Hanzeweg 31 3771 NG Barneveld Tel.: 0342-422724 / Fax : 0342-422861	Opsteller: K.W.	Gekontroleerd: J.R.	Beheerder: J.R.	
	Nummer: **E-ED-2069a**	Blad : 1 van 1	Datum: 29-8-91	Wijz.: a : 17-02-93

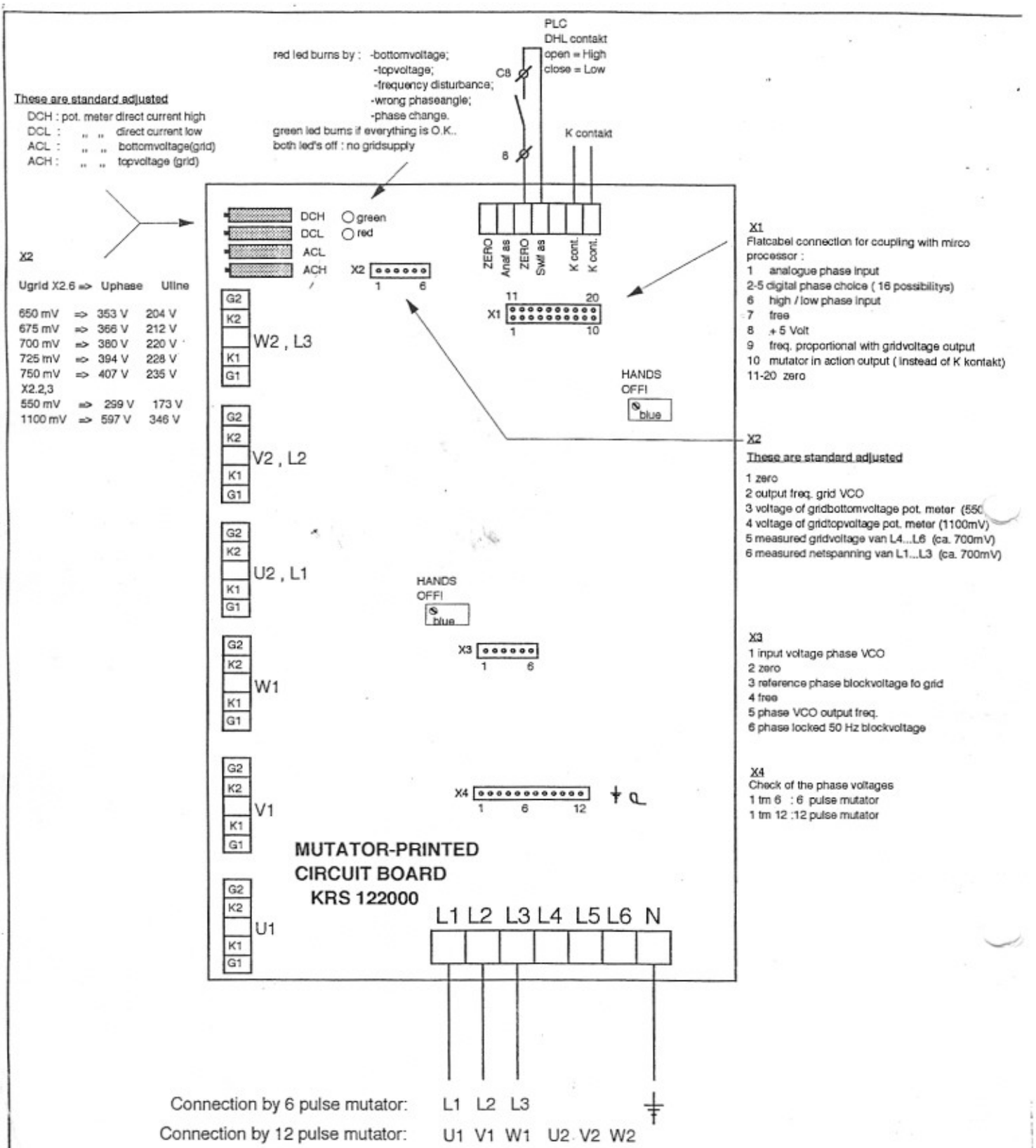

Eurp. proj.	Benaming: **MUTATOR P.C.B. CONNECTIONS DIAGRAM KRS 122000**		Ref: NEN - ISO 9001-4.5
LAGERWEY WINDTURBINE BV Hanzeweg 31 3771 NG Barneveld Tel.: 0342-422724 / Fax : 0342-422861	Opsteller: K.W.	Gekontroleerd: J.R.	Beheerder J.R.
	Nummer: E-EA - 2108d	Blad : ..1... of ...1...	Datum: 09-11-92
	Wijz.:	a: 16-11-92 b: 19-01-93 c: 09-04-93 d : 28-7-94	